COUNTY OF HENRICO
DEPARTMENT OF PUBLIC UTILITIES

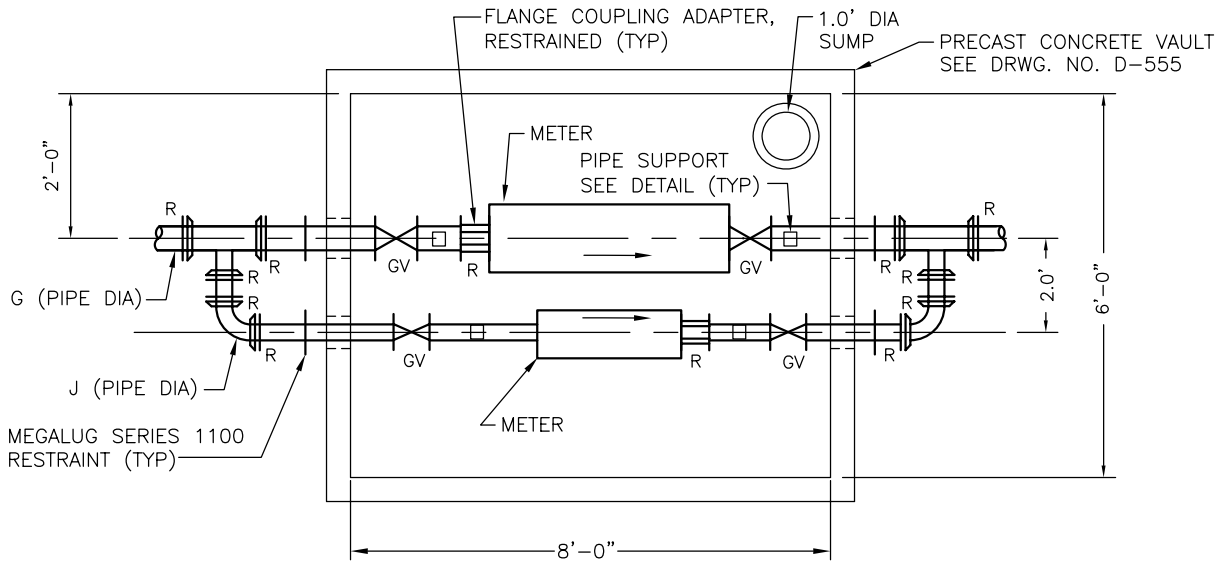

PLAN

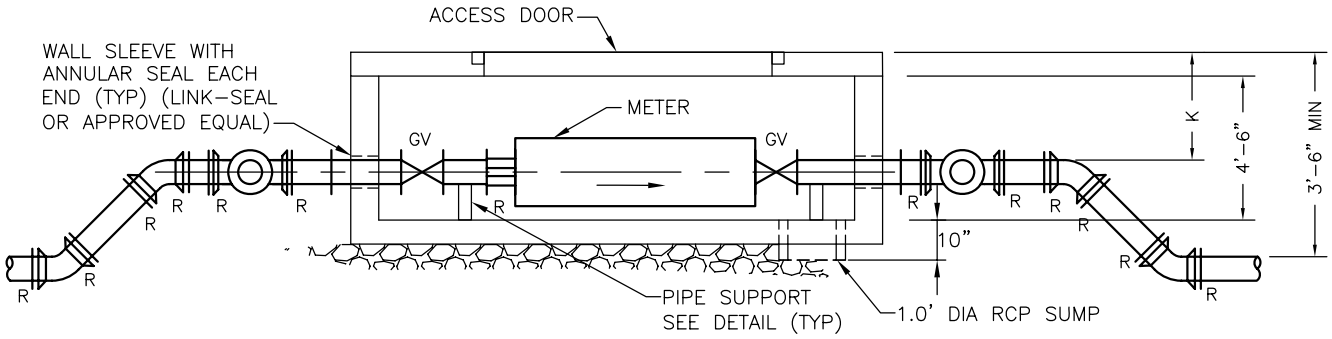

SECTION

DIMENSIONS			
	4" METER	6" METER	8" METER
G	4"	6"	8"
J	2"	4"	6"
K	3'-4"	3'-3"	3'-2"

REVISIONS		DRWG. NO.
06/20/2014	4", 6", AND 8" METER SETTING	D-560-1